Global LCD Panel Exchange Center www.panelook.com 屏库:全球液晶屏交易中心

SPECIFICATION
FOR
APPROVAL

( ) **Preliminary Specification**
(◆) **Final Specification**

Title	15.6" FHD TFT LCD

Customer	Fujitsu
MODEL	

SUPPLIER	LG Display Co., Ltd.
*MODEL	LP156WFC
Suffix	TLB1

*When you obtain standard approval,
please use the above model name without suffix

APPROVED BY	SIGNATURE
/	
/	
/	

Please return 1 copy for your confirmation with your signature and comments.

APPROVED BY	SIGNATURE
M. J. Lee / S.Manager	
REVIEWED BY	
K. Y. Kwon / Manager	
PREPARED BY	
J. H. Yoo / Engineer	
S. I. Joo / Engineer	

Products Engineering Dept.
LG Display Co., Ltd

One step solution for LCD / PDP / OLED panel application: Datasheet, inventory and accessory! www.panelook.com

Global LCD Panel Exchange Center www.panelook.com 屏库:全球液晶屏交易中心

Contents

No	ITEM	Page
	COVER	1
	CONTENTS	2
	RECORD OF REVISIONS	3
1	GENERAL DESCRIPTION	4
2	ABSOLUTE MAXIMUM RATINGS	5
3	ELECTRICAL SPECIFICATIONS	
3-1	ELECTRICAL CHARACTREISTICS	6
3-2	INTERFACE CONNECTIONS	8
3-3	LVDS SIGNAL TIMING SPECIFICATION	9
3-4	SIGNAL TIMING SPECIFICATIONS	11
3-5	SIGNAL TIMING WAVEFORMS	11
3-6	COLOR INPUT DATA REFERNECE	12
3-7	POWER SEQUENCE	13
4	OPTICAL SFECIFICATIONS	14
5	MECHANICAL CHARACTERISTICS	17
6	RELIABLITY	24
7	INTERNATIONAL STANDARDS	
7-1	SAFETY	25
7-2	EMC	25
7-3	Environment	25
8	PACKING	
8-1	DESIGNATION OF LOT MARK	26
8-2	PACKING FORM	26
9	PRECAUTIONS	27-28
A	APPENDIX. Enhanced Extended Display Identification Data	29-31

www.panelook.com

One step solution for LCD / PDP / OLED panel application: Datasheet, inventory and accessory! www.panelook.com

Global LCD Panel Exchange Center www.panelook.com 屏库:全球液晶屏交易中心

RECORD OF REVISIONS

Revision No	Revision Date	Page	Description	EDID ver
0.0	14, Feb, 2012	-	First Draft (Preliminary Specification)	0.0
1.0	11, May, 2012	-	Final CAS Released	1.0

www.panelook.com

One step solution for LCD / PDP / OLED panel application: Datasheet, inventory and accessory! www.panelook.com

Global LCD Panel Exchange Center www.panelook.com 屏库:全球液晶屏交易中心

1. General Description

The LP156WFC is a Color Active Matrix Liquid Crystal Display with an integral LED backlight system. The matrix employs a-Si Thin Film Transistor as the active element. It is a transmissive type display operating in the normally white mode. This TFT-LCD has 15.6 inches diagonally measured active display area with FHD resolution(1080 vertical by 1920 horizontal pixel array). Each pixel is divided into Red, Green and Blue sub-pixels or dots which are arranged in vertical stripes. Gray scale or the brightness of the sub-pixel color is determined with a 6-bit gray scale signal for each dot, thus, presenting a palette of more than 262,144 colors. The LP156WFC has been designed to apply the interface method that enables low power, high speed, low EMI. The LP156WFC is intended to support applications where thin thickness, low power are critical factors and graphic displays are important. In combination with the vertical arrangement of the sub-pixels, the LP156WFC characteristics provide an excellent flat display for office automation products such as Notebook PC.

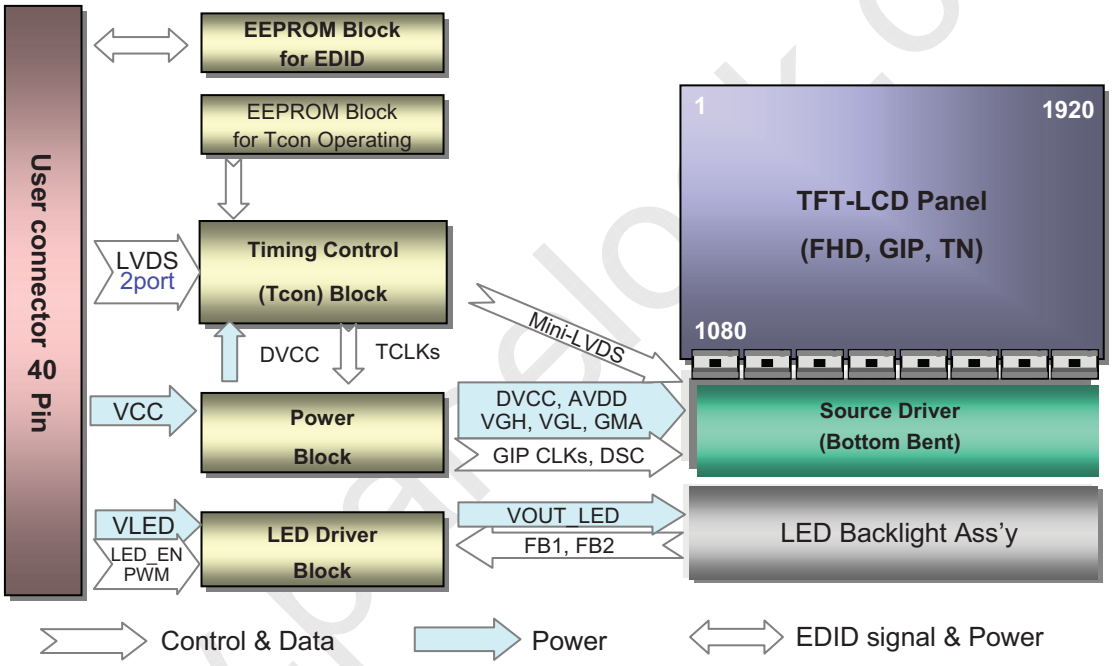

General Features

Active Screen Size	15.6 inches diagonal
Outline Dimension	359.3(H, typ.) × 209.5(V, typ.) × 5.7(D,max) [mm]
Pixel Pitch	0.17925 mm x 0.17925 mm
Pixel Format	1920 horiz. By 1080 vert. Pixels RGB strip arrangement
Color Depth	6-bit, 262,144 colors
Luminance, White	300 cd/m^2(Typ.5 point)
Power Consumption	Total 8.0W (Max.) Logic : 2.1 W (Max.@ Black), B/L : 5.9 W (Max.@ VLED 12V)
Weight	480g (Max.)
Display Operating Mode	Transmissive mode, Normally white
Surface Treatment	Anti-Glare treatment of the front polarizer
RoHS Comply	Yes
BFR / PVC / As Free	Yes for all.

One step solution for LCD / PDP / OLED panel application: Datasheet, inventory and accessory! www.panelook.com

Global LCD Panel Exchange Center www.panelook.com 屏库:全球液晶屏交易中心

2. Absolute Maximum Ratings

The following are maximum values which, if exceeded, may cause faulty operation or damage to the unit.

Table 1. ABSOLUTE MAXIMUM RATINGS

Parameter	Symbol	Values		Units	Notes
		Min	Max		
Power Input Voltage	VCC	-0.3	4.0	Vdc	at 25 ± 5°C
Operating Temperature	TOP	0	50	°C	1
Storage Temperature	HST	-20	60	°C	1
Operating Ambient Humidity	HOP	10	90	%RH	1
Storage Humidity	HST	10	90	%RH	1

Note : 1. Temperature and relative humidity range are shown in the figure below.
Wet bulb temperature should be 39°C Max, and no condensation of water.

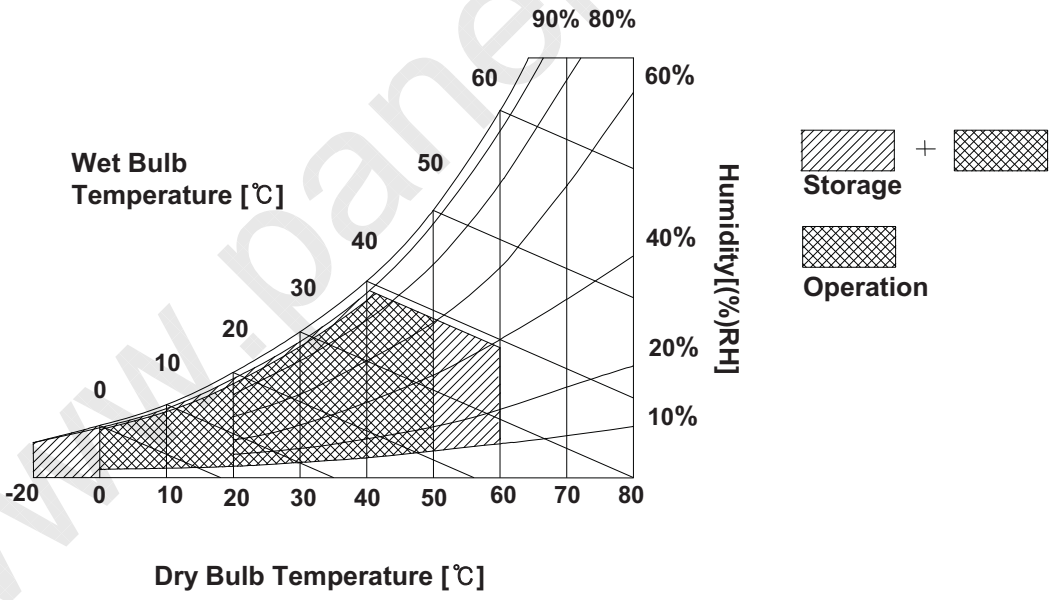

One step solution for LCD / PDP / OLED panel application: Datasheet, inventory and accessory! www.panelook.com

Global LCD Panel Exchange Center www.panelook.com 屏库:全球液晶屏交易中心

3. Electrical Specifications

3-1. Electrical Characteristics

The LP156WFC requires two power inputs. The first logic is employed to power the LCD electronics and to drive the TFT array and liquid crystal. The second backlight is the input about LED BL with LED Driver.

Table 2. ELECTRICAL CHARACTERISTICS

Parameter	Symbol	Values			Unit	Notes
		Min	Typ	Max		
LOGIC :						
Power Supply Input Voltage	V_{CC}	3.0	3.3	3.6	V	1
Power Supply Input Current Mosaic	I_{CC}	-	470	540	mA	2
Power Consumption	P_{CC}	-	1.6	1.8	W	2
Power Supply Inrush Current	I_{CC_P}	-	-	1500	mA	3
LVDS Impedance	Z_{LVDS}	90	100	110	Ω	4
BACKLIGHT : (with LED Driver)						
LED Power Input Voltage	V_{LED}	7.0	12.0	21.0	V	5
LED Power Input Current	I_{LED}	-	460	490	mA	6
LED Power Consumption	P_{LED}	-	5.5	5.9	W	6
LED Power Inrush Current	I_{LED_P}	-	-	1500	mA	7
PWM Duty Ratio		5	-	100	%	8
PWM Jitter	-	0	-	0.2	%	9
PWM Impedance	Z_{PWM}	20	40	60	kΩ	
PWM Frequency	F_{PWM}	200	-	1000	Hz	10
PWM High Level Voltage	V_{PWM_H}	3.0	-	5.3	V	
PWM Low Level Voltage	V_{PWM_L}	0	-	0.3	V	
LED_EN Impedance	Z_{PWM}	20	40	60	kΩ	
LED_EN High Voltage	$V_{LED_EN_H}$	3.0	-	5.3	V	
LED_EN Low Voltage	$V_{LED_EN_L}$	0	-	0.3	V	
Life Time		12,000	-	-	Hrs	11

www.panelook.com

One step solution for LCD / PDP / OLED panel application: Datasheet, inventory and accessory! www.panelook.com

Global LCD Panel Exchange Center www.panelook.com 屏库:全球液晶屏交易中心

Note)

1. The measuring position is the connector of LCM and the test conditions are under 25℃, fv = 60Hz, Black pattern.
2. The specified Icc current and power consumption are under the Vcc = 3.3V , 25℃, fv = 60Hz condition and Mosaic pattern.

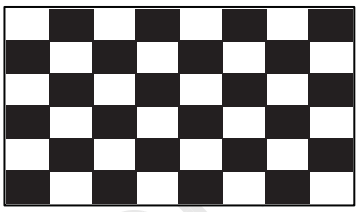

3. The below figures are the measuring Vcc condition and the Vcc control block LGD used. The Vcc condition is same as the minimum of T1 at Power on sequence.

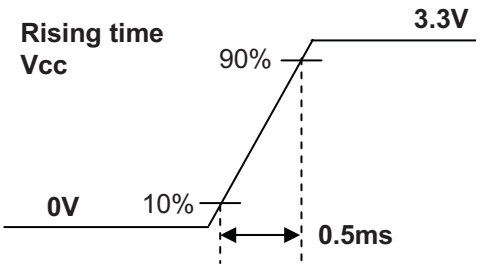

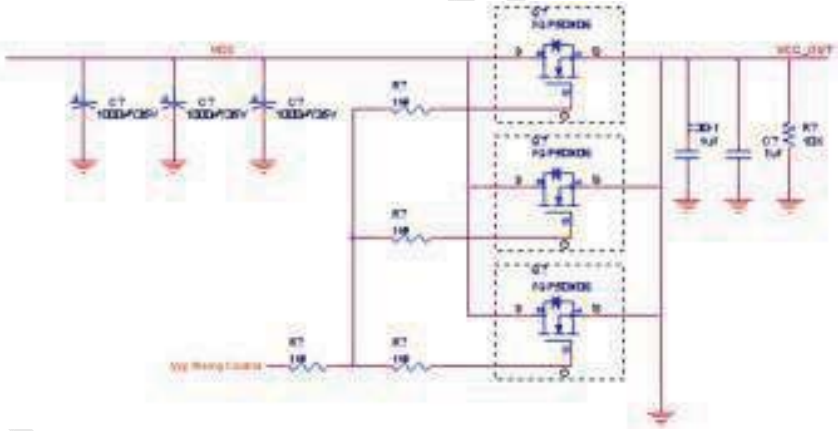

5. This impedance value is needed for proper display and measured form LVDS Tx to the mating connector.
6. The measuring position is the connector of LCM and the test conditions are under 25℃.
7. The current and power consumption with LED Driver are under the Vled = 12.0V , 25℃, Dimming of Max luminance and White pattern with the normal frame frequency operated(60Hz).
8. The below figures are the measuring Vled condition and the Vled control block LGD used. VLED control block is same with Vcc control block.

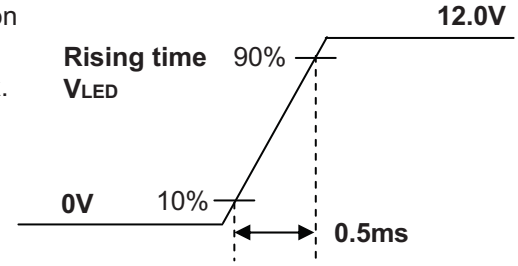

9. The operation of LED Driver below minimum dimming ratio may cause flickering or reliability issue.
10. If Jitter of PWM is bigger than maximum, it may induce flickering.
11. This Spec. is not effective at 100% dimming ratio as an exception because it has DC level equivalent to 0Hz. In spite of acceptable range as defined, the PWM Frequency should be fixed and stable for more consistent brightness control at any specific level desired.
12. The life time is determined as the time at which brightness of LCD is 50% compare to that of minimum value specified in table 7. under general user condition.

One step solution for LCD / PDP / OLED panel application: Datasheet, inventory and accessory! www.panelook.com

Global LCD Panel Exchange Center www.panelook.com 屏库:全球液晶屏交易中心

3-2. Interface Connections

This LCD employs two interface connections, a 40 pin connector is used for the module electronics interface and the other connector is used for the integral backlight system.

Table 3. MODULE CONNECTOR PIN CONFIGURATION (CN1)

Pin	Symbol	Description	Notes
1	NC	No Connection (Reserved)	**[Interface Chip]** 1. LCD : SiW, SW0617 (LCD Controller) Including LVDS Receiver. 2. System : SiW LVDS Rx or equivalent * Pin to Pin compatible with LVDS **[Connector]** LS Mtron GT05Q-40S-H10 **[Mating Connector]** 20453-#40T-## series or equivalent **[Connector pin arrangement]** 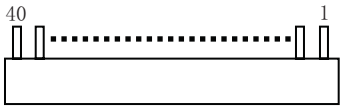 [LCD Module Rear View]
2	VCC	LCD Logic and driver power (3.3V Typ.)	
3	VCC	LCD Logic and driver power (3.3V Typ.)	
4	V EEDID	DDC Power (3.3V)	
5	NC	No Connection (Reserved)	
6	Clk EEDID	DDC Clock	
7	DATA EEDID	DDC Data	
8	ORX0-	Negative LVDS differential data input	
9	ORX0+	Positive LVDS differential data input	
10	GND	LCM Ground	
11	ORX1-	Negative LVDS differential data input	
12	ORX1+	Positive LVDS differential data input	
13	GND	LCM Ground	
14	ORX2-	Negative LVDS differential data input	
15	ORX2+	Positive LVDS differential data input	
16	GND	LCM Ground	
17	ORXC-	Negative LVDS differential clock input	
18	ORXC+	Positive LVDS differential clock input	
19	GND	LCM Ground	
20	ERX0-	Negative LVDS differential data input	
21	ERX0+	Positive LVDS differential data input	
22	GND	LCM Ground	
23	ERX1-	Negative LVDS differential data input	
24	ERX1+	Positive LVDS differential data input	
25	GND	LCM Ground	
26	ERX2-	Negative LVDS differential data input	
27	ERX2+	Positive LVDS differential data input	
28	GND	LCM Ground	
29	ERXC-	Negative LVDS differential clock input	
30	ERXC+	Positive LVDS differential clock input	
31	GND	LCM Ground (LED Backlight Ground)	
32	GND	LCM Ground (LED Backlight Ground)	
33	GND	LCM Ground (LED Backlight Ground)	
34	NC	No Connection (Reserved)	
35	PWM	System PWM Signal input for dimming	
36	LED_EN	LED Backlight On/Off	
37	NC	No Connection	
38	VLED	LED Backlight Power (7V-21V)	
39	VLED	LED Backlight Power (7V-21V)	
40	VLED	LED Backlight Power (7V-21V)	

One step solution for LCD / PDP / OLED panel application: Datasheet, inventory and accessory! www.panelook.com

Global LCD Panel Exchange Center www.panelook.com 屏库:全球液晶屏交易中心

3-3. LVDS Signal Timing Specifications

3-3-1. DC Specification

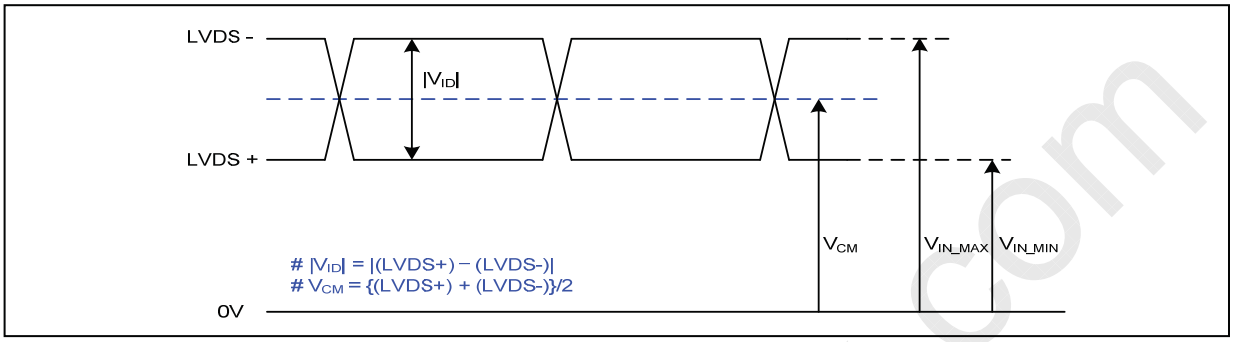

Description	Symbol	Min	Max	Unit	Notes
LVDS Differential Voltage	$\|V_{ID}\|$	100	600	mV	-
LVDS Common mode Voltage	V_{CM}	0.6	1.8	V	-
LVDS Input Voltage Range	V_{IN}	0.3	2.1	V	-

3-3-2. AC Specification

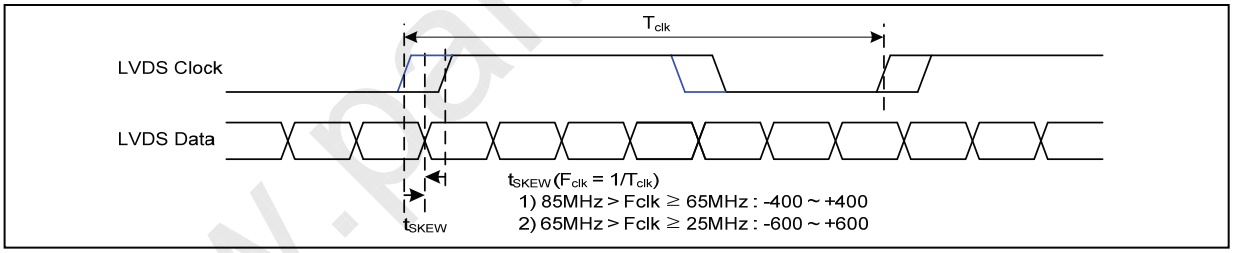

Description	Symbol	Min	Max	Unit	Notes
LVDS Clock to Data Skew Margin	t_{SKEW}	- 400	+ 400	ps	85MHz > Fclk ≥ 65MHz
	t_{SKEW}	- 600	+ 600	ps	65MHz > Fclk ≥ 25MHz
LVDS Clock to Clock Skew Margin (Even to Odd)	t_{SKEW_EO}	- 1/7	+ 1/7	T_{clk}	-
Maximum deviation of input clock frequency during SSC	F_{DEV}	-	± 3	%	-
Maximum modulation frequency of input clock during SSC	F_{MOD}	-	200	KHz	-

One step solution for LCD / PDP / OLED panel application: Datasheet, inventory and accessory! www.panelook.com

Global LCD Panel Exchange Center www.panelook.com 屏库:全球液晶屏交易中心

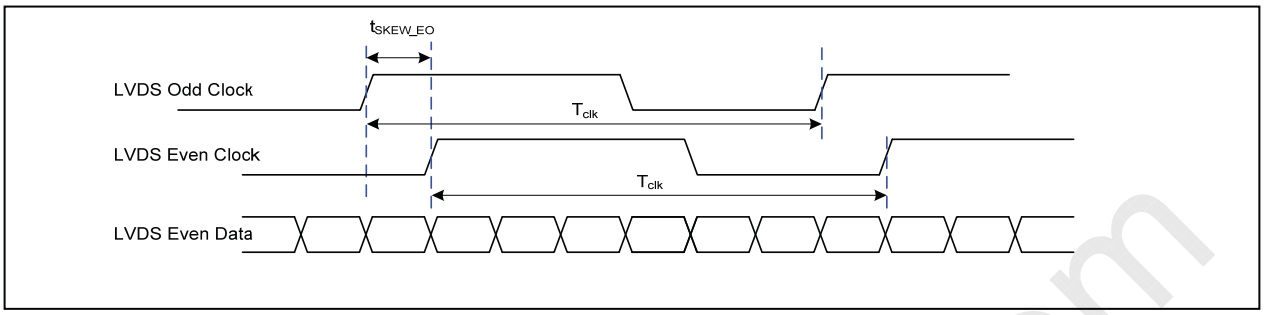

< Clock skew margin between channel >

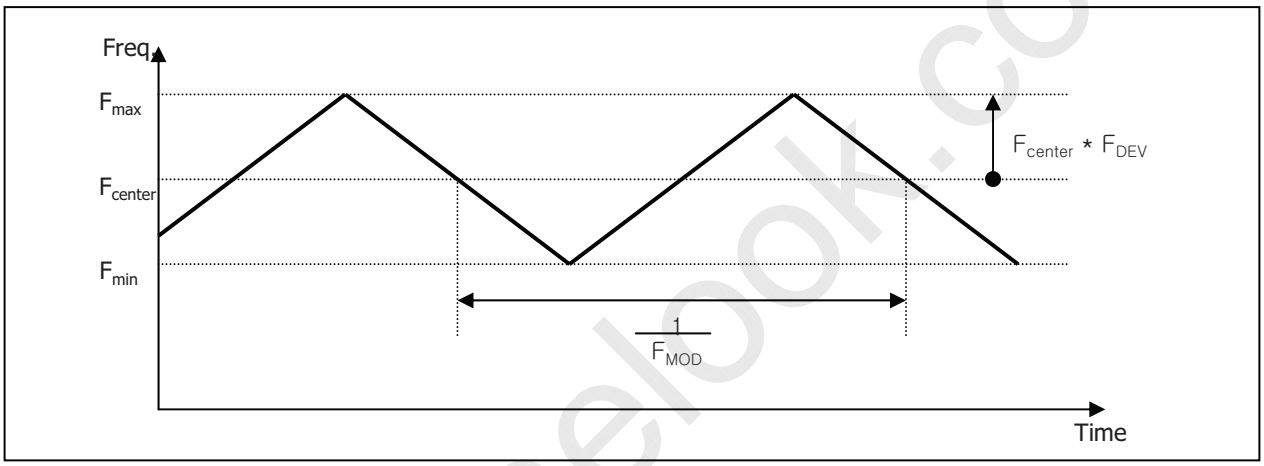

< Spread Spectrum >

3-3-3. Data Format

1) LVDS 2 Port

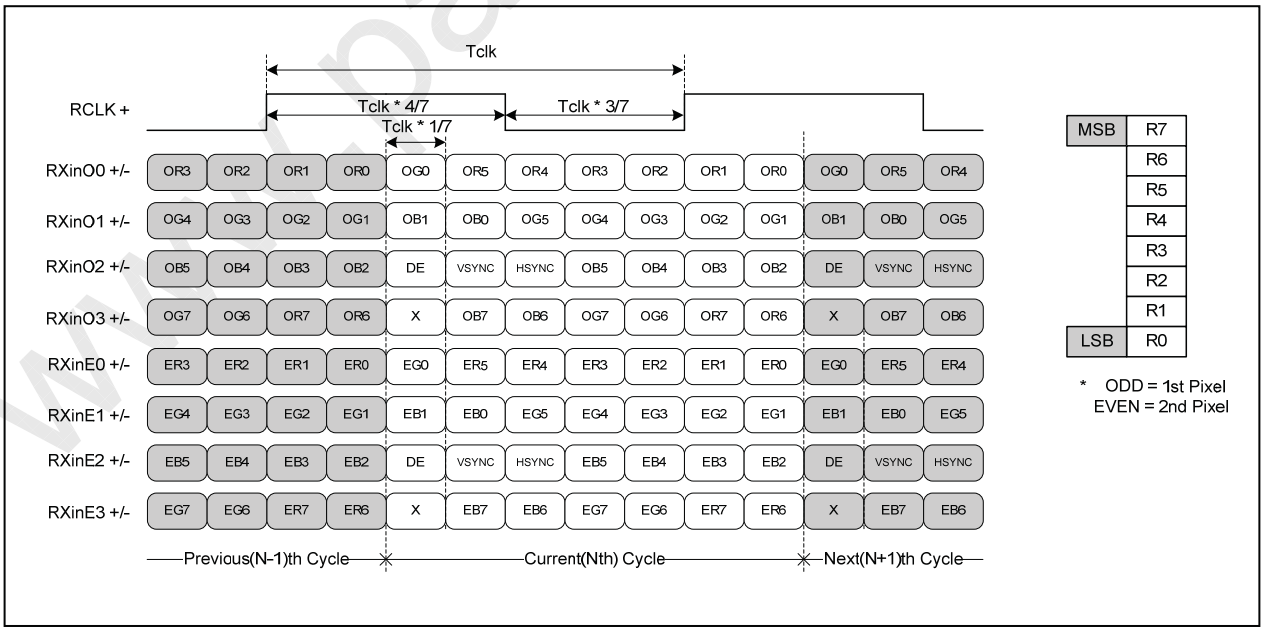

< LVDS Data Format >

One step solution for LCD / PDP / OLED panel application: Datasheet, inventory and accessory! www.panelook.com

Global LCD Panel Exchange Center www.panelook.com 屏库:全球液晶屏交易中心

3-4. Signal Timing Specifications

This is the signal timing required at the input of the User connector. All of the interface signal timing should be satisfied with the following specifications and specifications of LVDS Tx/Rx for its proper operation.

Table 4. TIMING TABLE

ITEM	Symbol		Min.	Typ.	Max.	Unit	Note
DCLK	Frequency	f_{CLK}	-	69.25	-	MHz	2Port
Hsync	Period	t_{HP}	1010	1040	1078	tCLK	2Port
	Width	t_{WH}	16	16	16		
	Width-Active	tw_{HA}	960	960	960		
Vsync	Period	t_{VP}	1096	1111	1122	tHP	
	Width	t_{WV}	5	5	5		
	Width-Active	tw_{VA}	1080	1080	1080		
Data Enable	Horizontal back porch	t_{HBP}	24	40	50	tCLK	2Port
	Horizontal front porch	t_{HFP}	10	24	52		
	Vertical back porch	t_{VBP}	10	23	28	tHP	
	Vertical front porch	t_{VFP}	1	3	9		

3-5. Signal Timing Waveforms

Condition : VCC =3.3V

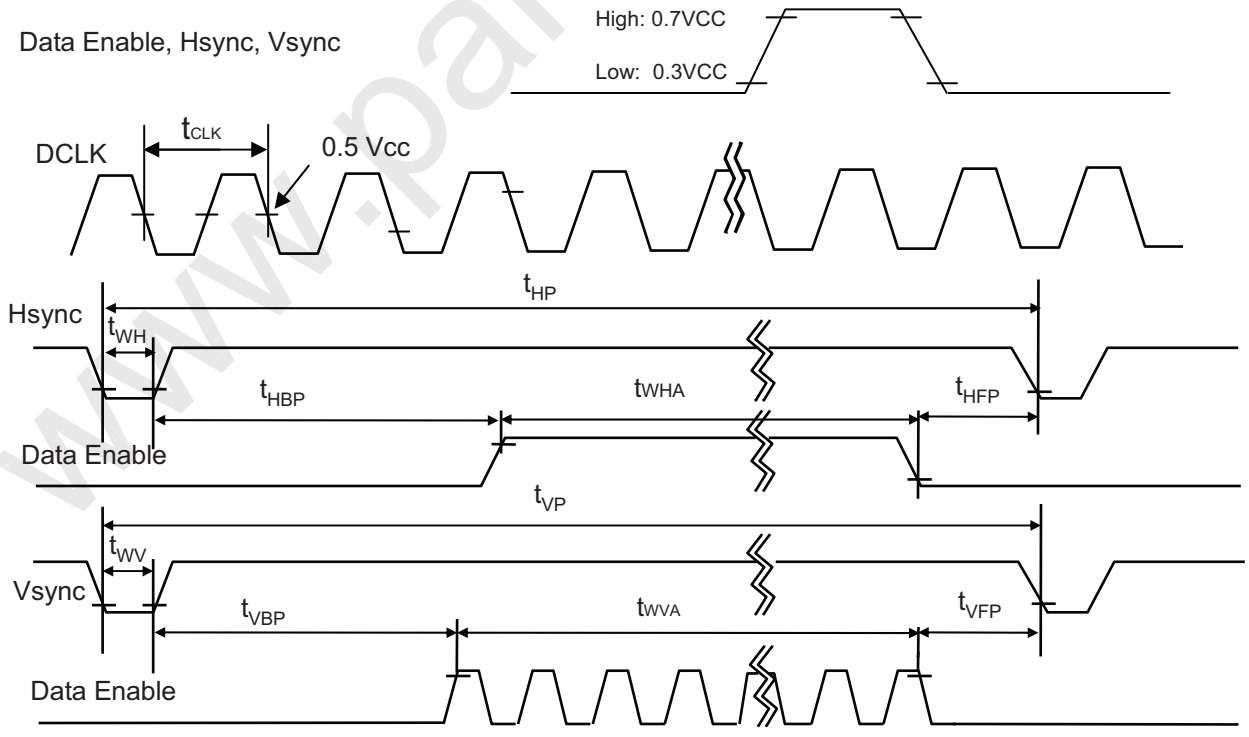

One step solution for LCD / PDP / OLED panel application: Datasheet, inventory and accessory! www.panelook.com

Global LCD Panel Exchange Center www.panelook.com 屏库:全球液晶屏交易中心

3-6. Color Input Data Reference

The brightness of each primary color (red,green and blue) is based on the 6-bit gray scale data input for the color ; the higher the binary input, the brighter the color. The table below provides a reference for color versus data input.

Table 5. COLOR DATA REFERENCE

Color		Input Color Data																	
		RED						GREEN						BLUE					
		MSB					LSB	MSB					LSB	MSB					LSB
		R5	R4	R3	R2	R1	R0	G5	G4	G3	G2	G1	G0	B5	B4	B3	B2	B1	B0
Basic Color	Black	0	0	0	0	0	0	0	0	0	0	0	0	0	0	0	0	0	0
	Red	1	1	1	1	1	1	0	0	0	0	0	0	0	0	0	0	0	0
	Green	0	0	0	0	0	0	1	1	1	1	1	1	0	0	0	0	0	0
	Blue	0	0	0	0	0	0	0	0	0	0	0	0	1	1	1	1	1	1
	Cyan	0	0	0	0	0	0	1	1	1	1	1	1	1	1	1	1	1	1
	Magenta	1	1	1	1	1	1	0	0	0	0	0	0	1	1	1	1	1	1
	Yellow	1	1	1	1	1	1	1	1	1	1	1	1	0	0	0	0	0	0
	White	1	1	1	1	1	1	1	1	1	1	1	1	1	1	1	1	1	1
RED	RED (00)	0	0	0	0	0	0	0	0	0	0	0	0	0	0	0	0	0	0
	RED (01)	0	0	0	0	0	1	0	0	0	0	0	0	0	0	0	0	0	0
	…			…						…						…			
	RED (62)	1	1	1	1	1	0	0	0	0	0	0	0	0	0	0	0	0	0
	RED (63)	1	1	1	1	1	1	0	0	0	0	0	0	0	0	0	0	0	0
GREEN	GREEN (00)	0	0	0	0	0	0	0	0	0	0	0	0	0	0	0	0	0	0
	GREEN (01)	0	0	0	0	0	0	0	0	0	0	0	1	0	0	0	0	0	0
	…			…						…						…			
	GREEN (62)	0	0	0	0	0	0	1	1	1	1	1	0	0	0	0	0	0	0
	GREEN (63)	0	0	0	0	0	0	1	1	1	1	1	1	0	0	0	0	0	0
BLUE	BLUE (00)	0	0	0	0	0	0	0	0	0	0	0	0	0	0	0	0	0	0
	BLUE (01)	0	0	0	0	0	0	0	0	0	0	0	0	0	0	0	0	0	1
	…			…						…						…			
	BLUE (62)	0	0	0	0	0	0	0	0	0	0	0	0	1	1	1	1	1	0
	BLUE (63)	0	0	0	0	0	0	0	0	0	0	0	0	1	1	1	1	1	1

One step solution for LCD / PDP / OLED panel application: Datasheet, inventory and accessory! www.panelook.com

Global LCD Panel Exchange Center www.panelook.com 屏库:全球液晶屏交易中心

3-7. Power Sequence

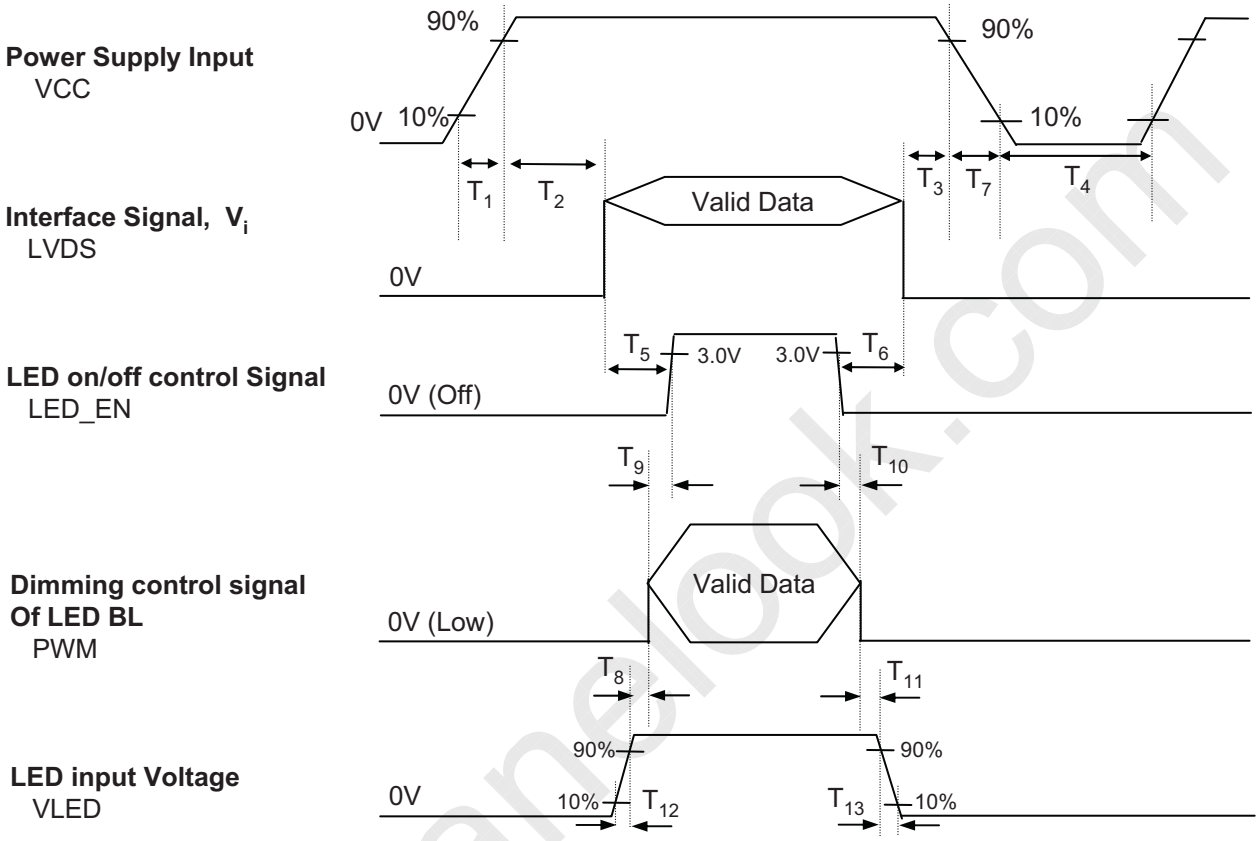

Table 6. POWER SEQUENCE TABLE

Logic Parameter	Value			Units	LED Parameter	Value			Units
	Min.	Typ.	Max.			Min.	Typ.	Max.	
T_1	0.5	-	10	ms	T_8	10	-	-	ms
T_2	0	-	50	ms	T_9	0	-	-	ms
T_3	0	-	50	ms	T_{10}	0	-	-	ms
T_4	400	-	-	ms	T_{11}	10	-	-	ms
T_5	200	-	-	ms	T_{12}	0.5	-	-	ms
T_6	200	-	-	ms	T_{13}	0	-	5000	ms
T_7	3	-	10	ms					

Note)
1. Do not insert the mating cable when system turn on.
2. Valid Data have to meet "3-3. LVDS Signal Timing Specifications"
3. LVDS, LED_EN and PWM need to be on pull-down condition on invalid status.
4. LGD recommend the rising sequence of VLED after the Vcc and valid status of LVDS turn on.

One step solution for LCD / PDP / OLED panel application: Datasheet, inventory and accessory! www.panelook.com

Global LCD Panel Exchange Center www.panelook.com 屏库:全球液晶屏交易中心

4. Optical Specification

Optical characteristics are determined after the unit has been 'ON' and stable for approximately 30 minutes in a dark environment at 25°C. The values specified are at an approximate distance 50cm from the LCD surface at a viewing angle of Φ and Θ equal to 0°.
FIG. 1 presents additional information concerning the measurement equipment and method.

FIG. 1 Optical Characteristic Measurement Equipment and Method

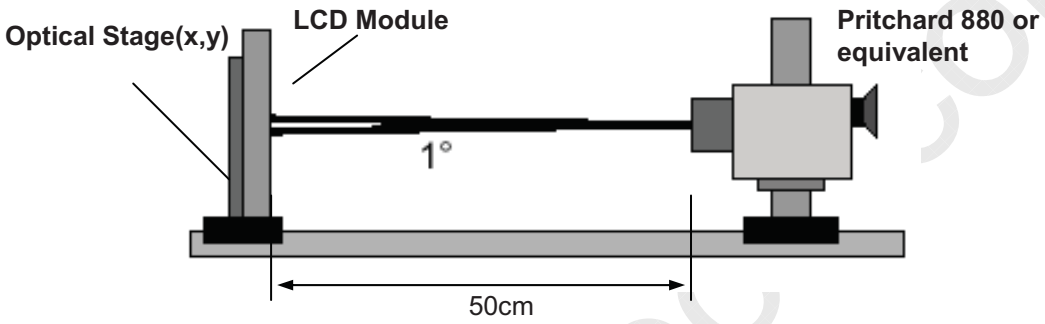

Table 8. OPTICAL CHARACTERISTICS

Ta=25°C, VCC=3.3V, fv=60Hz, f_{CLK}= 138.5MHz

Parameter	Symbol	Values			Units	Notes
		Min	Typ	Max		
Contrast Ratio	CR	500	-	-		1
Surface Luminance, white	L_{WH}	255	300	-	cd/m^2	2
Luminance Variation	δ_{WHITE}	-	1.4	1.6		3
Response Time	$Tr_R + Tr_D$	-	8	16	ms	4
Color Coordinates						
RED	RX	0.581	0.611	0.641		
	RY	0.327	0.357	0.387		
GREEN	GX	0.293	0.323	0.353		
	GY	0.559	0.589	0.619		
BLUE	BX	0.119	0.149	0.179		
	BY	0.026	0.056	0.086		
WHITE	WX	0.283	0.313	0.343		
	WY	0.299	0.329	0.359		
Viewing Angle						5
x axis, right(Φ=0°)	Θr	60	-	-	degree	
x axis, left (Φ=180°)	Θl	60	-	-	degree	
y axis, up (Φ=90°)	Θu	50	-	-	degree	
y axis, down (Φ=270°)	Θd	50	-	-	degree	
Gray Scale						6
Color Gamut	C/G	55	60	-	%	
Gamma	γ	-	2.2	-		

One step solution for LCD / PDP / OLED panel application: Datasheet, inventory and accessory! www.panelook.com

Global LCD Panel Exchange Center www.panelook.com 屏库:全球液晶屏交易中心

Note)

1. Contrast Ratio(CR) is defined mathematically as

$$\text{Contrast Ratio} = \frac{\text{Surface Luminance with all white pixels}}{\text{Surface Luminance with all black pixels}}$$

2. Surface luminance is center point of the LCD surface 50cm from the surface with all pixels displaying white. For more information see FIG 1.

$$L_{WH} = L_1$$

3. The variation in surface luminance , The panel total variation (δ_{WHITE}) is determined by measuring L_N at each test position 1 through 13 and then defined as followed numerical formula. For more information see FIG 2.

$$\delta_{WHITE} = \frac{\text{Maximum}(L_1, L_2, \ldots L_{13})}{\text{Minimum}(L_1, L_2, \ldots L_{13})}$$

4. Response time is the time required for the display to transition from white to black (rise time, Tr_R) and from black to white(Decay Time, Tr_D). For additional information see FIG 3.

5. Viewing angle is the angle at which the contrast ratio is greater than 10. The angles are determined for the horizontal or x axis and the vertical or y axis with respect to the z axis which is normal to the LCD surface. For more information see FIG 4.

6. Gray scale specification

* f_V = 60Hz

Gray Level	Luminance [%] (Typ)
L0	0.00
L7	1.00
L15	4.25
L23	10.90
L31	21.01
L39	34.82
L47	52.49
L55	74.17
L63	100

One step solution for LCD / PDP / OLED panel application: Datasheet, inventory and accessory! www.panelook.com

Global LCD Panel Exchange Center www.panelook.com 屏库:全球液晶屏交易中心

FIG. 2 Luminance

<measuring point for surface luminance & measuring point for luminance variation>

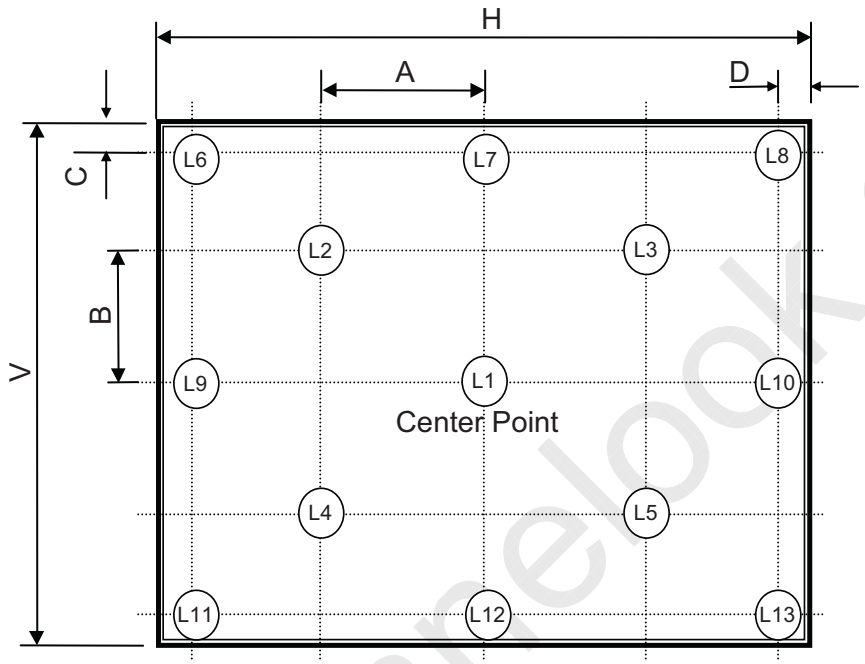

H,V : ACTIVE AREA
A : H/4 mm
B : V/4 mm
C : 10 mm
D : 10 mm
POINTS : 13 POINTS

FIG. 3 Response Time

The response time is defined as the following figure and shall be measured by switching the input signal for “black” and “white”.

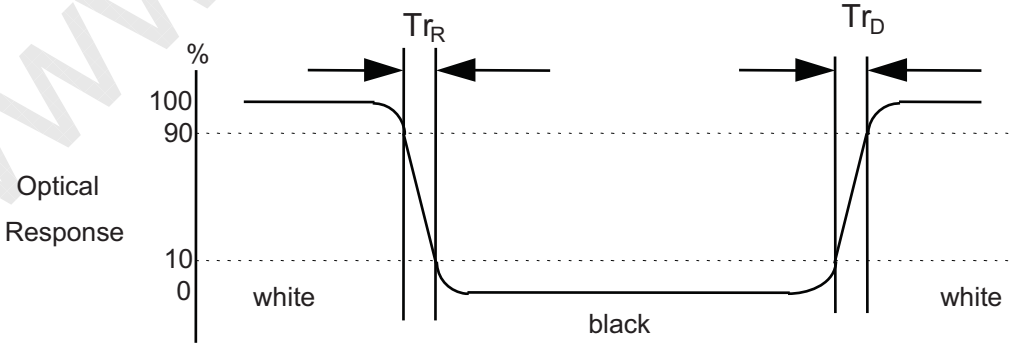

One step solution for LCD / PDP / OLED panel application: Datasheet, inventory and accessory! www.panelook.com

Global LCD Panel Exchange Center www.panelook.com 屏库:全球液晶屏交易中心

5. Mechanical Characteristics

The contents provide general mechanical characteristics for the model LP156WFC. In addition the figures in the next page are detailed mechanical drawing of the LCD.

Outline Dimension	Horizontal	359.3 ± 0.5mm
	Vertical	209.5 ± 0.5mm
	Thickness	5.7mm (max)
Bezel Area	Horizontal (VESA Standard)	349.8 ± 0.5mm
	Vertical (VESA Standard)	197.1 ± 0.5mm
Active Display Area	Horizontal	344.16 ± 0.3 mm
	Vertical	193.59 ± 0.3 mm
Weight	480g (Max.)	
Surface Treatment	Anti-Glare treatment of the front polarizer	

www.panelook.com

One step solution for LCD / PDP / OLED panel application: Datasheet, inventory and accessory! www.panelook.com

Global LCD Panel Exchange Center www.panelook.com 屏库:全球液晶屏交易中心

<FRONT VIEW>

Note) Unit:[mm], General tolerance: ± 0.5mm

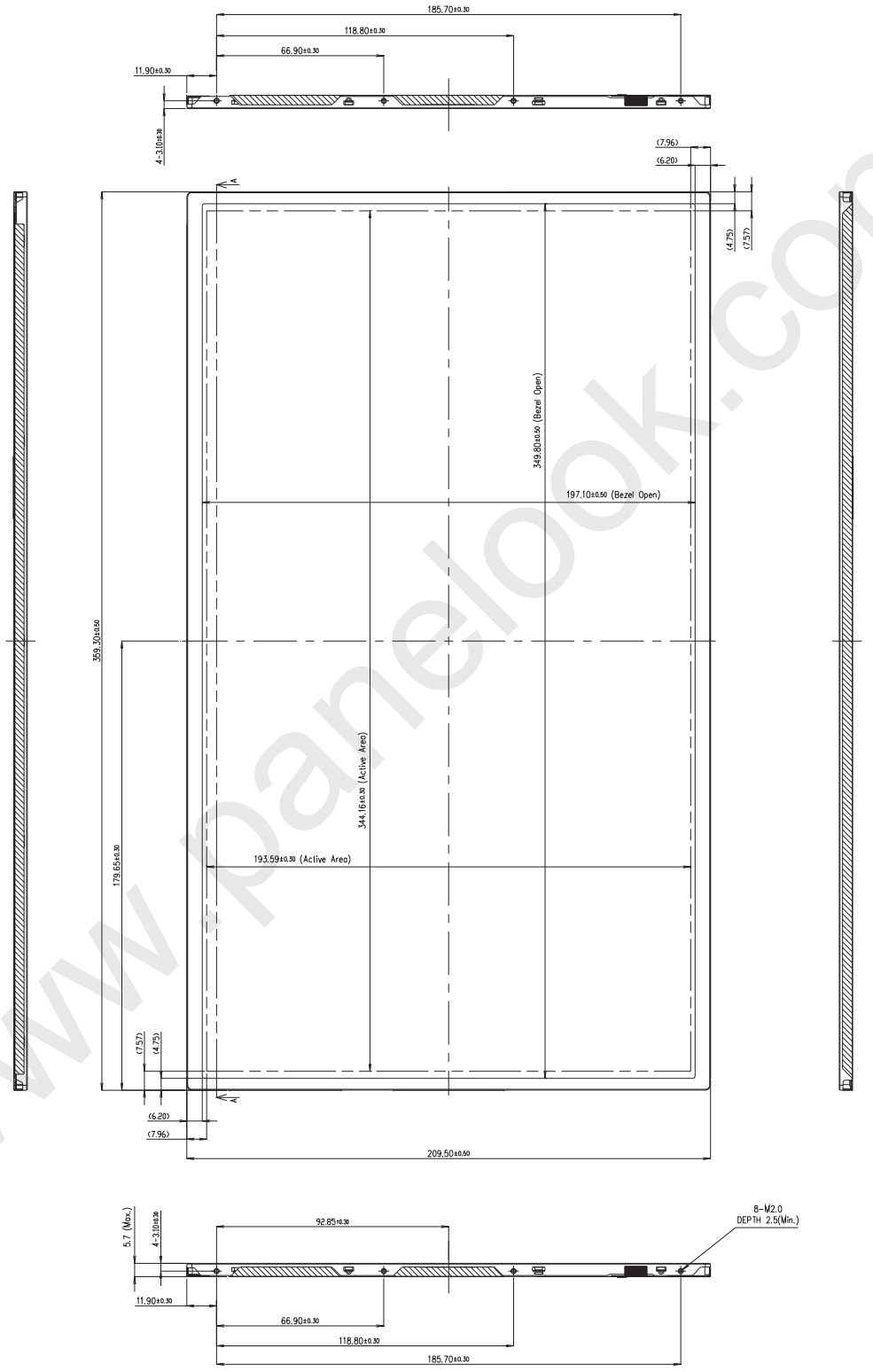

www.panelook.com

One step solution for LCD / PDP / OLED panel application: Datasheet, inventory and accessory! www.panelook.com

Global LCD Panel Exchange Center www.panelook.com 屏库:全球液晶屏交易中心

<REAR VIEW>

Note) Unit:[mm], General tolerance: ± 0.5mm

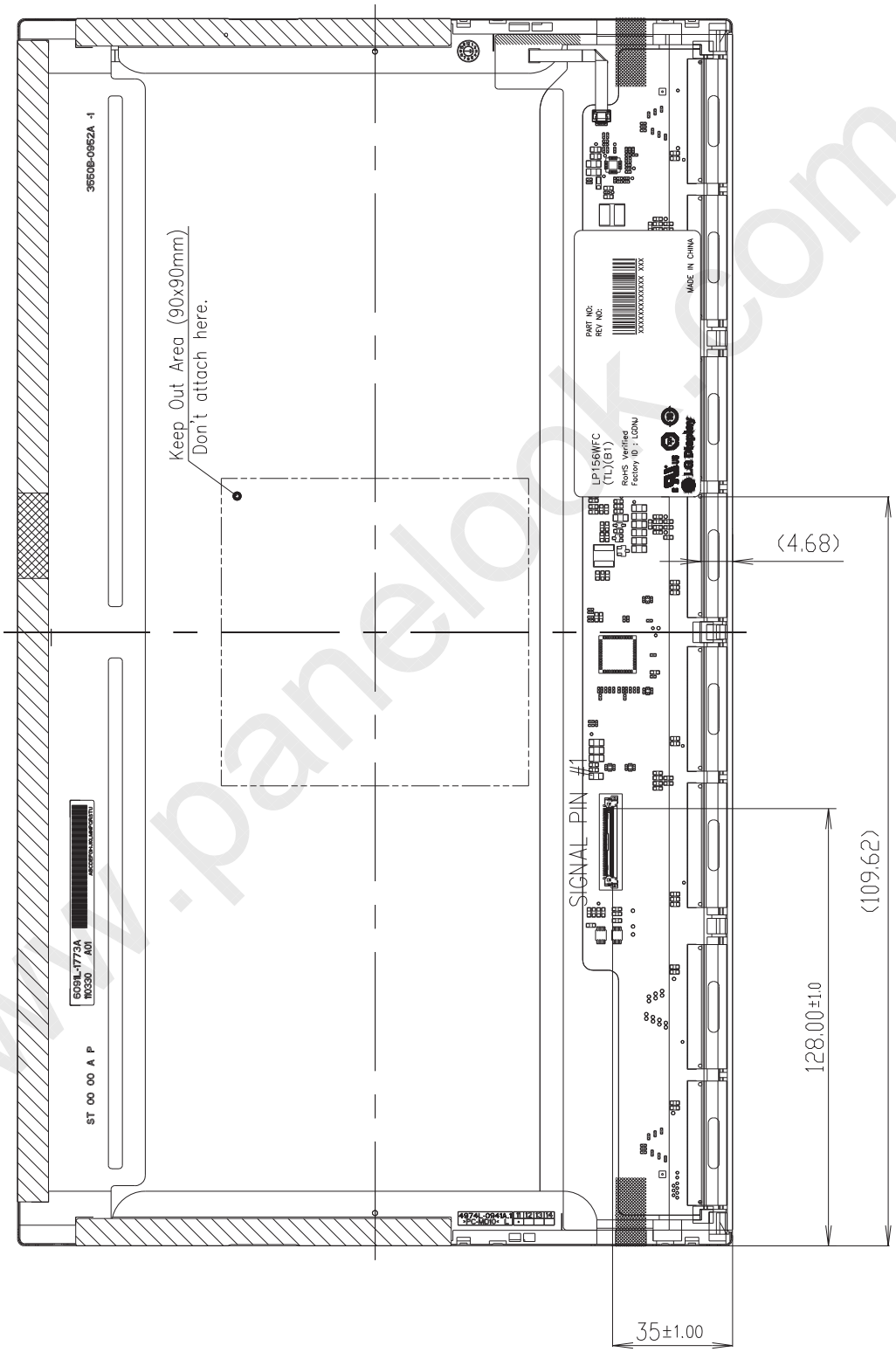

One step solution for LCD / PDP / OLED panel application: Datasheet, inventory and accessory! www.panelook.com

Global LCD Panel Exchange Center www.panelook.com 屏库:全球液晶屏交易中心

[DETAIL DESCRIPTION OF SIDE MOUNTING SCREW]

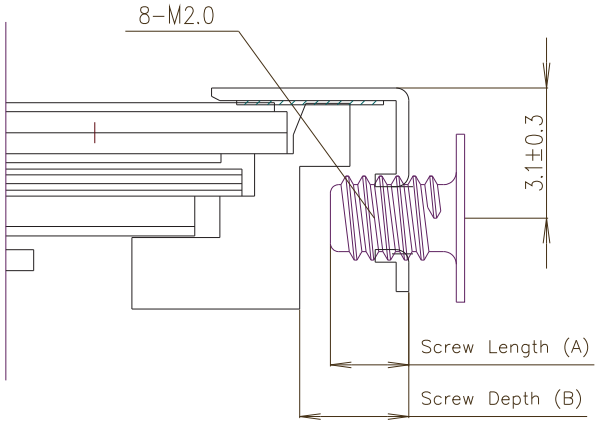

* Mounting Screw Length (A)
  = 2.0(Min) / 2.5(Max)
* Mounting Screw Hole Depth (B)
  = 2.5(Min)
* Mounting hole location : 3.10(typ.)
* Torque : 2.0 kgf.cm(Max)
  (Measurement gauge : torque meter)

Notes : 1. Screw plated through the method of non-electrolytic nickel plating is preferred to reduce possibility that results in vertical and/or horizontal line defect due to the conductive particles from screw surface.

www.panelook.com

One step solution for LCD / PDP / OLED panel application: Datasheet, inventory and accessory! www.panelook.com

Global LCD Panel Exchange Center www.panelook.com 屏库:全球液晶屏交易中心

LGD Proposal for system cover design.(Appendix)

1	Gap check for securing the enough gap between LCM and System cover.	

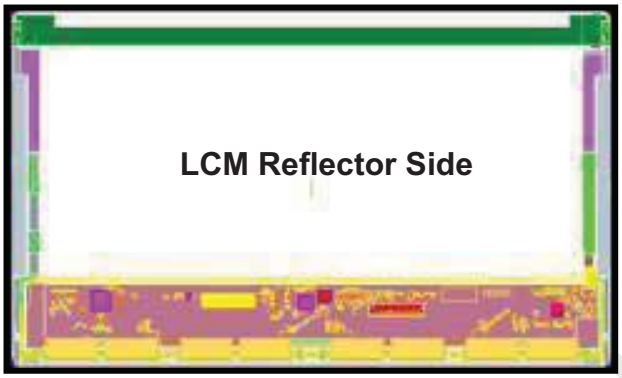

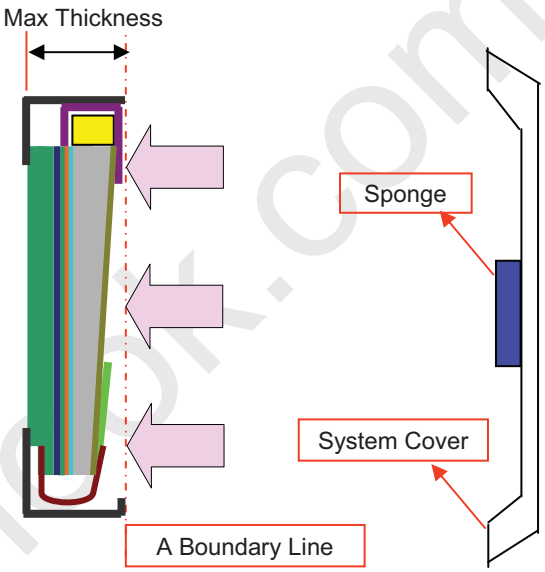

Define	1.Rear side of LCM is sensitive against external stress,and previous check about interference is highly needed. 2.In case there is something from system cover comes into the boundary above,mechanical interference may cause the FOS defects. (Eg:Ripple,White spot..)
2	Check if antenna cable is sufficiently apart from T-CON of LCD Module.
Define	

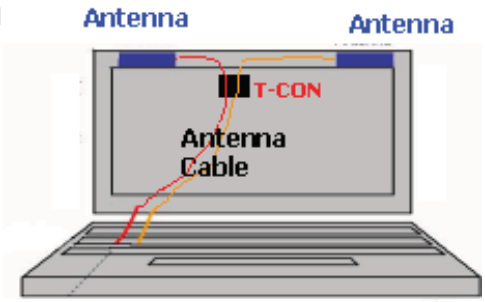

NO GOOD

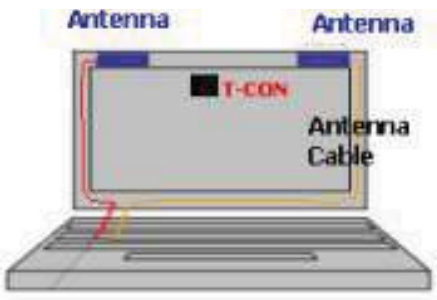

GOOD

	1.If system antenna is overlapped with T-CON,it might be cause the noise.

One step solution for LCD / PDP / OLED panel application: Datasheet, inventory and accessory! www.panelook.com

Global LCD Panel Exchange Center www.panelook.com 屏库:全球液晶屏交易中心

LGD Proposal for system cover design.

3	Gap check for securing the enough gap between LCM and System hinge.	

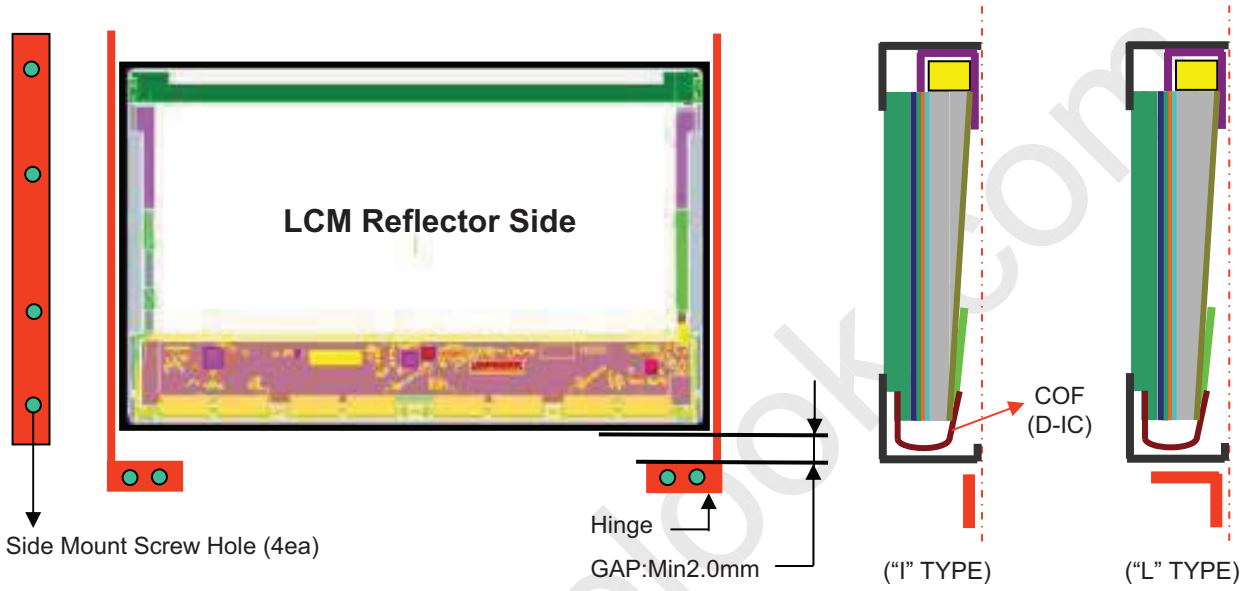

Define	1.At least 2.0mm of gap needs to be secured to prevent the shock related defects. 2."L" type of hinge is recommended than "I" type under shock test.
4	Checking the path of the System wire.

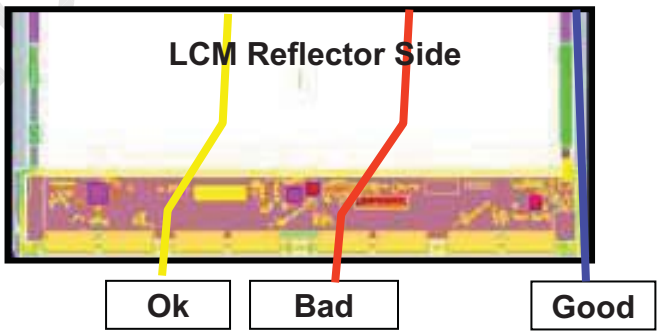

Define	1.COF area needs to be handled with care. 2.GOOD ➔Wire path design to system side. OK➔ Wire path is located between COFs. BAD➔Wire path overlapped with COF area.

One step solution for LCD / PDP / OLED panel application: Datasheet, inventory and accessory! www.panelook.com

Global LCD Panel Exchange Center www.panelook.com 屏库:全球液晶屏交易中心

LGD Proposal for system cover design.

5	Using a bracket on the top of LCM is not recommended.	

bracket

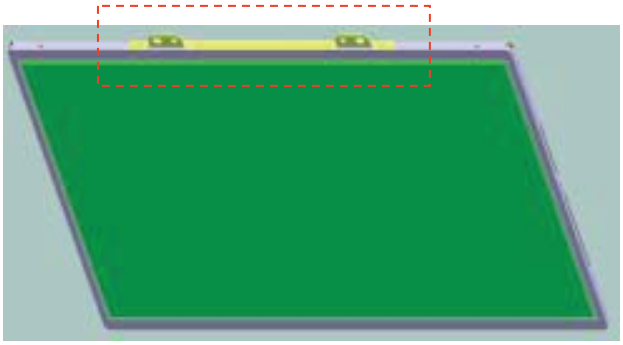

With bracket

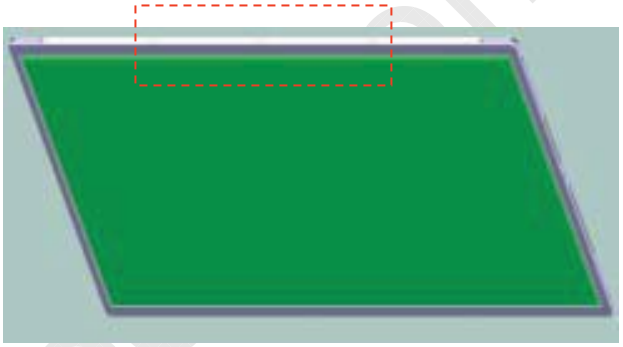

Without bracket

Define	1.Condition without bracket is good for mechanical noise,and can minimize the light leakage from deformation of bracket. 2.The results shows that there is no difference between the condition with or without bracket.
6	Securing additional gap on CNT area..

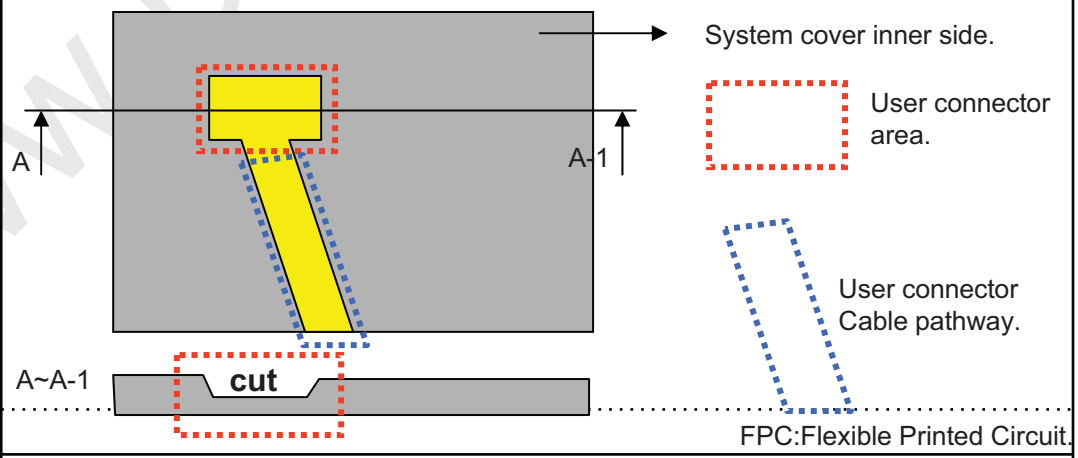

Define	1.CNT area is specially sensitive against external stress,and additional gap by cutting on system cover will be helpful on removing the Ripple. 2.Using a thinner CNT will be better. (eg: FPC type)

One step solution for LCD / PDP / OLED panel application: Datasheet, inventory and accessory! www.panelook.com

Global LCD Panel Exchange Center www.panelook.com 屏库:全球液晶屏交易中心

6. Reliability

Environment test condition

No.	Test Item	Conditions
1	High temperature storage test	Ta= 60°C, 240h
2	Low temperature storage test	Ta= -20°C, 240h
3	High temperature operation test	Ta= 50°C, 50%RH, 240h
4	Low temperature operation test	Ta= 0°C, 240h
5	Vibration test (non-operating)	Sine wave, 10 ~ 500 ~ 10Hz, 1.5G, 0.37oct/min 3 axis, 1hour/axis
6	Shock test (non-operating)	Half sine wave, 180G, 2ms one shock of each six faces(I.e. run 180G 2ms for all six faces)
7	Altitude operating storage / shipment	0 ~ 10,000 feet (3,048m) 24Hr 0 ~ 40,000 feet (12,192m) 24Hr

{ Result Evaluation Criteria }
There should be no change which might affect the practical display function when the display quality test is conducted under normal operating condition.

One step solution for LCD / PDP / OLED panel application: Datasheet, inventory and accessory! www.panelook.com

Global LCD Panel Exchange Center www.panelook.com 屏库:全球液晶屏交易中心

7. International Standards

7-1. Safety

a) UL 60950-1, Underwriters Laboratories Inc.
Information Technology Equipment - Safety - Part 1 : General Requirements.

b) CAN/CSA C22.2 No.60950-1-07, Canadian Standards Association.
Information Technology Equipment - Safety - Part 1 : General Requirements.

c) EN 60950-1, European Committee for Electrotechnical Standardization (CENELEC).
Information Technology Equipment - Safety - Part 1 : General Requirements.

d) IEC 60950-1, The International Electrotechnical Commission (IEC).
Information Technology Equipment - Safety - Part 1 : General Requirements.

7-2. EMC

a) ANSI C63.4 "American National Standard for Methods of Measurement of Radio-Noise Emissions from Low-Voltage Electrical and Electronic Equipment in the Range of 9 kHz to 40 GHz." American National Standards Institute (ANSI), 2003.

b) CISPR 22 "Information technology equipment – Radio disturbance characteristics – Limit and methods of measurement." International Special Committee on Radio Interference (CISPR), 2005.

c) CISPR 13 "Sound and television broadcast receivers and associated equipment – Radio disturbance characteristics – Limits and method of measurement." International Special Committee on Radio Interference (CISPR), 2006.

7-3. Environment

a) RoHS, Directive 2002/95/EC of the European Parliament and of the council of 27 January 2003

www.panelook.com

One step solution for LCD / PDP / OLED panel application: Datasheet, inventory and accessory! www.panelook.com

Global LCD Panel Exchange Center www.panelook.com 屏库:全球液晶屏交易中心

8. Packing

8-1. Designation of Lot Mark

a) Lot Mark

A	B	C	D	E	F	G	H	I	J	K	L	M

A,B,C : SIZE(INCH)
D : YEAR
E : MONTH
F ~ M : SERIAL NO.

Note

1. YEAR

Year	2011	2012	2013	2014	2015	2016	2017	2018	2019	2020
Mark	A	B	C	D	E	F	G	H	J	K

2. MONTH

Month	Jan	Feb	Mar	Apr	May	Jun	Jul	Aug	Sep	Oct	Nov	Dec
Mark	1	2	3	4	5	6	7	8	9	A	B	C

b) Location of Lot Mark

Serial No. is printed on the label. The label is attached to the backside of the LCD module.
This is subject to change without prior notice.

8-2. Packing Form

a) Package quantity in one box : 22 pcs

b) Box Size : 478 x 365 x 288

One step solution for LCD / PDP / OLED panel application: Datasheet, inventory and accessory! www.panelook.com

Global LCD Panel Exchange Center www.panelook.com 屏库:全球液晶屏交易中心

9. PRECAUTIONS

Please pay attention to the followings when you use this TFT LCD module.

9-1. MOUNTING PRECAUTIONS

(1) You must mount a module using holes arranged in four corners or four sides.
(2) You should consider the mounting structure so that uneven force (ex. Twisted stress) is not applied to the module. And the case on which a module is mounted should have sufficient strength so that external force is not transmitted directly to the module.
(3) Please attach the surface transparent protective plate to the surface in order to protect the polarizer. Transparent protective plate should have sufficient strength in order to the resist external force.
(4) You should adopt radiation structure to satisfy the temperature specification.
(5) Acetic acid type and chlorine type materials for the cover case are not desirable because the former generates corrosive gas of attacking the polarizer at high temperature and the latter causes circuit break by electro-chemical reaction.
(6) Do not touch, push or rub the exposed polarizers with glass, tweezers or anything harder than HB pencil lead. And please do not rub with dust clothes with chemical treatment.
Do not touch the surface of polarizer for bare hand or greasy cloth.(Some cosmetics are detrimental to the polarizer.)
(7) When the surface becomes dusty, please wipe gently with absorbent cotton or other soft materials like chamois soaks with petroleum benzene. Normal-hexane is recommended for cleaning the adhesives used to attach front / rear polarizers. Do not use acetone, toluene and alcohol because they cause chemical damage to the polarizer.
(8) Wipe off saliva or water drops as soon as possible. Their long time contact with polarizer causes deformations and color fading.
(9) Do not open the case because inside circuits do not have sufficient strength.

9-2. OPERATING PRECAUTIONS

(1) The spike noise causes the mis-operation of circuits. It should be lower than following voltage :
V=± 200mV(Over and under shoot voltage)

(2) Response time depends on the temperature.(In lower temperature, it becomes longer.)
(3) Brightness depends on the temperature. (In lower temperature, it becomes lower.)
And in lower temperature, response time(required time that brightness is stable after turned on) becomes longer.
(4) Be careful for condensation at sudden temperature change. Condensation makes damage to polarizer or electrical contacted parts. And after fading condensation, smear or spot will occur.
(5) When fixed patterns are displayed for a long time, remnant image is likely to occur.
(6) Module has high frequency circuits. Sufficient suppression to the electromagnetic interference shall be done by system manufacturers. Grounding and shielding methods may be important to minimized the interference.

One step solution for LCD / PDP / OLED panel application: Datasheet, inventory and accessory! www.panelook.com

Global LCD Panel Exchange Center www.panelook.com 屏库:全球液晶屏交易中心

9-3. ELECTROSTATIC DISCHARGE CONTROL

Since a module is composed of electronic circuits, it is not strong to electrostatic discharge. Make certain that treatment persons are connected to ground through wrist band etc. And don't touch interface pin directly.

9-4. PRECAUTIONS FOR STRONG LIGHT EXPOSURE

Strong light exposure causes degradation of polarizer and color filter.

9-5. STORAGE

When storing modules as spares for a long time, the following precautions are necessary.

(1) Store them in a dark place. Do not expose the module to sunlight or fluorescent light. Keep the temperature between 5°C and 35°C at normal humidity.
(2) The polarizer surface should not come in contact with any other object.
It is recommended that they be stored in the container in which they were shipped.

9-6. HANDLING PRECAUTIONS FOR PROTECTION FILM

(1) When the protection film is peeled off, static electricity is generated between the film and polarizer. This should be peeled off slowly and carefully by people who are electrically grounded and with well ion-blown equipment or in such a condition, etc.
(2) The protection film is attached to the polarizer with a small amount of glue. If some stress is applied to rub the protection film against the polarizer during the time you peel off the film, the glue is apt to remain on the polarizer.
Please carefully peel off the protection film without rubbing it against the polarizer.
(3) When the module with protection film attached is stored for a long time, sometimes there remains a very small amount of glue still on the polarizer after the protection film is peeled off.
(4) You can remove the glue easily. When the glue remains on the polarizer surface or its vestige is recognized, please wipe them off with absorbent cotton waste or other soft material like chamois soaked with normal-hexane.

One step solution for LCD / PDP / OLED panel application: Datasheet, inventory and accessory! www.panelook.com

Global LCD Panel Exchange Center www.panelook.com 屏库:全球液晶屏交易中心

APPENDIX A. Enhanced Extended Display Identification Data (EEDID™) 1/3

EDID Data for *Fujitsu* _ ver. 1.0

2012. 5. 11

	Byte (Dec)	Byte (Hex)	Field Name and Comments	Value (Hex)	Value (Bin)
Header	0	00	Header	00	00000000
	1	01	Header	FF	11111111
	2	02	Header	FF	11111111
	3	03	Header	FF	11111111
	4	04	Header	FF	11111111
	5	05	Header	FF	11111111
	6	06	Header	FF	11111111
	7	07	Header	00	00000000
Vendor / Product EDID Version	8	08	EISA manufacture code (3 Character ID) LGD	30	00110000
	9	09	EISA manufacture code (Compressed ASCII)	E4	11100100
	10	0A	Panel Supplier Reserved - Product Code 032Ch	2C	00101100
	11	0B	(Hex. LSB first)	03	00000011
	12	0C	LCD Module Serial No - Preferred but Optional ("0" If not used)	00	00000000
	13	0D	LCD Module Serial No - Preferred but Optional ("0" If not used)	00	00000000
	14	0E	LCD Module Serial No - Preferred but Optional ("0" If not used)	00	00000000
	15	0F	LCD Module Serial No - Preferred but Optional ("0" If not used)	00	00000000
	16	10	Week of Manufacture 00 weeks	00	00000000
	17	11	Year of Manufacture 2012 years	16	00010110
	18	12	EDID structure version # = 1	01	00000001
	19	13	EDID revision # = 3	03	00000011
Display Parameters	20	14	Video input Definition = Digital signal	80	10000000
	21	15	Max H image size (Rounded cm) = 34cm	22	00100010
	22	16	Max V image size (Rounded cm) = 19cm	13	00010011
	23	17	Display gamma = (gamma*100)-100 = Example:(2.2*100)-100=120	78	01111000
	24	18	Feature Support (no_DPMS, no_Active Off/Very Low Power, RGB color display, Timing BLK 1,no_GTF)	0A	00001010
Panel Color Coordinates	25	19	Red/Green Low Bits (RxRy/GxGy)	AF	10101111
	26	1A	Blue/White Low Bits (BxBy/WxWy)	55	01010101
	27	1B	Red X Rx = 0.611	9C	10011100
	28	1C	Red Y Ry = 0.357	5B	01011011
	29	1D	Green X Gx = 0.323	52	01010010
	30	1E	Green Y Gy = 0.589	96	10010110
	31	1F	Blue X Bx = 0.149	26	00100110
	32	20	Blue Y By = 0.056	0E	00001110
	33	21	White X Wx = 0.313	50	01010000
	34	22	White Y Wy = 0.329	54	01010100
Established Timings	35	23	Established timing 1 (00h if not used)	00	00000000
	36	24	Established timing 2 (00h if not used)	00	00000000
	37	25	Manufacturer's timings (00h if not used)	00	00000000
Standard Timing ID	38	26	Standard timing ID1 (01h if not used)	01	00000001
	39	27	Standard timing ID1 (01h if not used)	01	00000001
	40	28	Standard timing ID2 (01h if not used)	01	00000001
	41	29	Standard timing ID2 (01h if not used)	01	00000001
	42	2A	Standard timing ID3 (01h if not used)	01	00000001
	43	2B	Standard timing ID3 (01h if not used)	01	00000001
	44	2C	Standard timing ID4 (01h if not used)	01	00000001
	45	2D	Standard timing ID4 (01h if not used)	01	00000001
	46	2E	Standard timing ID5 (01h if not used)	01	00000001
	47	2F	Standard timing ID5 (01h if not used)	01	00000001
	48	30	Standard timing ID6 (01h if not used)	01	00000001
	49	31	Standard timing ID6 (01h if not used)	01	00000001
	50	32	Standard timing ID7 (01h if not used)	01	00000001
	51	33	Standard timing ID7 (01h if not used)	01	00000001
	52	34	Standard timing ID8 (01h if not used)	01	00000001
	53	35	Standard timing ID8 (01h if not used)	01	00000001

One step solution for LCD / PDP / OLED panel application: Datasheet, inventory and accessory! www.panelook.com

Global LCD Panel Exchange Center www.panelook.com 屏库:全球液晶屏交易中心

APPENDIX A. Enhanced Extended Display Identification Data (EEDID™) 2/3

	Byte (Dec)	Byte (Hex)	Field Name and Comments	Value (Hex)	Value (Bin)
Timing Descriptor #1	54	**36**	Pixel Clock/10,000 (LSB) 138.5	**1A**	00011010
	55	**37**	Pixel Clock/10,000 (MSB)	**36**	00110110
	56	**38**	Horizontal Active (HA) (lower 8 bits) 1920 pixels	**80**	10000000
	57	**39**	Horizontal Blanking (HB) (lower 8 bits) 160 pixels	**A0**	10100000
	58	**3A**	Horizontal Active (HA) / Horizontal Blanking (HB) (upper 4:4bits)	**70**	01110000
	59	**3B**	Vertical Active (VA) 1080 lines	**38**	00111000
	60	**3C**	Vertical Blanking (VB) (DE Blanking typ.for DE only panels) 31 lines	**1F**	00011111
	61	**3D**	Vertical Active (VA) / Vertical Blanking (VB) (upper 4:4bits)	**40**	01000000
	62	**3E**	Horizontal Front Porch in pixels (HF) (lower 8 bits) 48 pixels	**30**	00110000
	63	**3F**	Horizontal Sync Pulse Width in pixels (HS) (lower 8 bits) 32 pixels	**20**	00100000
	64	**40**	Vertical Front Porch in lines (VF) : Vertical Sync Pluse Width in lines (VS) (lower 4 bits) 3 lines : 5 lines	**35**	00110101
	65	**41**	Horizontal Front Porch/ Sync Pulse Width/ Vertical Front Porch/ Sync Pulse Width (upper 2bits)	**00**	00000000
	66	**42**	Horizontal Video Image Size (mm) (lower 8 bits) 344 mm	**58**	01011000
	67	**43**	Vertical Video Image Size (mm) (lower 8 bits) 104 mm	**C2**	11000010
	68	**44**	Horizontal Image Size / Vertical Image Size (upper 4 bits)	**10**	00010000
	69	**45**	Horizontal Border = 0 (Zero for Notebook LCD)	**00**	00000000
	70	**46**	Vertical Border = 0 (Zero for Notebook LCD)	**00**	00000000
	71	**47**	Non-Interlace, Normal display, no stereo, Digital Separate (Vsync_NEG, Hsync_NEG), DE only note : LSB is set to '1' if panel is DE-timing only. H/V can be ignored.	**19**	00011001
Timing Descriptor #2	72	**48**	Flag	**00**	00000000
	73	**49**	Flag	**00**	00000000
	74	**4A**	Flag	**00**	00000000
	75	**4B**	Data Type Tag (Descriptor Defined by manufacturer)	**00**	00000000
	76	**4C**	Flag	**00**	00000000
	77	**4D**	Descriptor Defined by manufacturer	**00**	00000000
	78	**4E**	Descriptor Defined by manufacturer	**00**	00000000
	79	**4F**	Descriptor Defined by manufacturer	**00**	00000000
	80	**50**	Descriptor Defined by manufacturer	**00**	00000000
	81	**51**	Descriptor Defined by manufacturer	**00**	00000000
	82	**52**	Descriptor Defined by manufacturer	**00**	00000000
	83	**53**	Descriptor Defined by manufacturer	**00**	00000000
	84	**54**	Descriptor Defined by manufacturer	**00**	00000000
	85	**55**	Descriptor Defined by manufacturer	**00**	00000000
	86	**56**	Descriptor Defined by manufacturer	**00**	00000000
	87	**57**	Descriptor Defined by manufacturer	**00**	00000000
	88	**58**	Descriptor Defined by manufacturer	**00**	00000000
	89	**59**	Descriptor Defined by manufacturer	**00**	00000000
Timing Descriptor #3	90	**5A**	Flag	**00**	00000000
	91	**5B**	Flag	**00**	00000000
	92	**5C**	Flag	**00**	00000000
	93	**5D**	Data Type Tag (Alphanumeric Data String (ASCII String))	**FE**	11111110
	94	**5E**	Flag	**00**	00000000
	95	**5F**	Alphanumeric Data String (ASCII String) L	**4C**	01001100
	96	**60**	Alphanumeric Data String (ASCII String) G	**47**	01000111
	97	**61**	Alphanumeric Data String (ASCII String)	**20**	00100000
	98	**62**	Alphanumeric Data String (ASCII String) D	**44**	01000100
	99	**63**	Alphanumeric Data String (ASCII String) i	**69**	01101001
	100	**64**	Alphanumeric Data String (ASCII String) s	**73**	01110011
	101	**65**	Alphanumeric Data String (ASCII String) p	**70**	01110000
	102	**66**	Alphanumeric Data String (ASCII String) l	**6C**	01101100
	103	**67**	Alphanumeric Data String (ASCII String) a	**61**	01100001
	104	**68**	Alphanumeric Data String (ASCII String) y	**79**	01111001
	105	**69**	Manufacturer P/N(If<13 char--> 0Ah, then terminate with ASCⅡ code 0Ah,set remaining char = 20h)	**0A**	00001010
	106	**6A**	Manufacturer P/N(If<13 char--> 0Ah, then terminate with ASCⅡ code 0Ah,set remaining char = 20h)	**20**	00100000
	107	**6B**	Manufacturer P/N(If<13 char--> 0Ah, then terminate with ASCⅡ code 0Ah,set remaining char = 20h)	**20**	00100000

One step solution for LCD / PDP / OLED panel application: Datasheet, inventory and accessory! www.panelook.com

Global LCD Panel Exchange Center www.panelook.com 屏库:全球液晶屏交易中心

APPENDIX A. Enhanced Extended Display Identification Data (EEDID™) 3/3

	Byte (Dec)	Byte (Hex)	Field Name and Comments		Value (Hex)	Value (Bin)
Timing Descriptor #4	108	**6C**	Flag		**00**	00000000
	109	**6D**	Flag		**00**	00000000
	110	**6E**	Flag		**00**	00000000
	111	**6F**	Data Type Tag (Alphanumeric Data String (ASCII String))		**FE**	11111110
	112	**70**	Flag		**00**	00000000
	113	**71**	Alphanumeric Data String (ASCII String)	L	**4C**	01001100
	114	**72**	Alphanumeric Data String (ASCII String)	P	**50**	01010000
	115	**73**	Alphanumeric Data String (ASCII String)	1	**31**	00110001
	116	**74**	Alphanumeric Data String (ASCII String)	5	**35**	00110101
	117	**75**	Alphanumeric Data String (ASCII String)	6	**36**	00110110
	118	**76**	Alphanumeric Data String (ASCII String)	W	**57**	01010111
	119	**77**	Alphanumeric Data String (ASCII String)	F	**46**	01000110
	120	**78**	Alphanumeric Data String (ASCII String)	C	**43**	01000011
	121	**79**	Alphanumeric Data String (ASCII String)	-	**2D**	00101101
	122	**7A**	Alphanumeric Data String (ASCII String)	T	**54**	01010100
	123	**7B**	Alphanumeric Data String (ASCII String)	L	**4C**	01001100
	124	**7C**	Alphanumeric Data String (ASCII String)	B	**42**	01000010
	125	**7D**	Alphanumeric Data String (ASCII String)	1	**31**	00110001
Checksum	126	**7E**	Extension flag (# of optional 128 panel ID extension block to follow, Typ = 0)		**00**	00000000
	127	**7F**	Check Sum (The 1-byte sum of all 128 bytes in this panel ID block shall = 0)		**41**	01000001

www.panelook.com

One step solution for LCD / PDP / OLED panel application: Datasheet, inventory and accessory! www.panelook.com